LBCA-02 ACTIVE BLEND CONTROL
25K, ACTIVE PICKUPS
100K, PASSIVE PICKUPS

LHZ
VINTAGE BASS PREAMPS

The LBCA-02 is an Active Balance Control designed to be used with Active pickups (25K version) or Passive pickups (100k version) and features modular DuPont-compatible cable connectors for easy installation. The LBCA-02 works well with both the classic and X-series pickups from EMG™ as well as active or passive pickups from most other manufacturers.

The benefit of using an Active Balance Control over a traditional passive balance potentiometer is the elimination of insertion loss. This phenomenon is commonly noticed as a loss of treble and volume level in the center position and a narrow range of blending between pickups.

The LBCA-02 was engineered to minimize insertion loss effects, provide a smooth transition from the bridge to neck pickup throughout the entire adjustment range, and work seamlessly with the LHZ preamp.

IMPORTANT: The LBCA-02 is available in two configurations. Users with Active pickups should select the 25K version, and users with passive pickups should select the 100K version. As the LBCA provides a buffered output, it is recommended that a 25K volume potentiometer be used between the LBCA and LHZ preamp for best low-noise performance.

INSTALLATION INSTRUCTIONS

The LBCA-02 receives input from two pickups via the IN 1 and IN 2 connectors, and provides an output via the OUT connector. The block diagram below shows the typical order of connections:

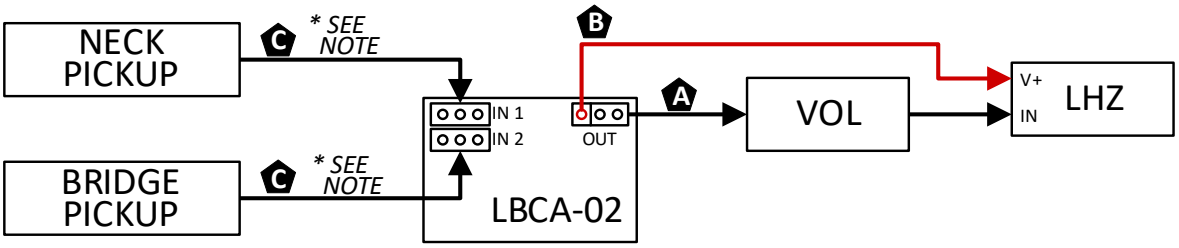

NOTE: *We provide cables with flying leads so pickups with traditional soldered wires can be connected to the LBCA. The flying lead connectors are soldered to pickup wires so they will work as quick-disconnect cables. The flying lead cables are NOT NEEDED when using EMG quick-disconnect pickup cables.*

The IN and OUT connectors on the LBCA-02 have three pins that are designated:

- RED: Positive power.
- BLACK: Negative power / Signal common.
- WHITE: Audio signal.

The LBCA-02 requires power (works with both 9-volt and 18-volt systems) for the active electronics, so it is important that the pins are wired correctly. The diagram below illustrates the connections, and the back of the LBCA-02 board has labelling to indicate the appropriate wire colors for each pin.

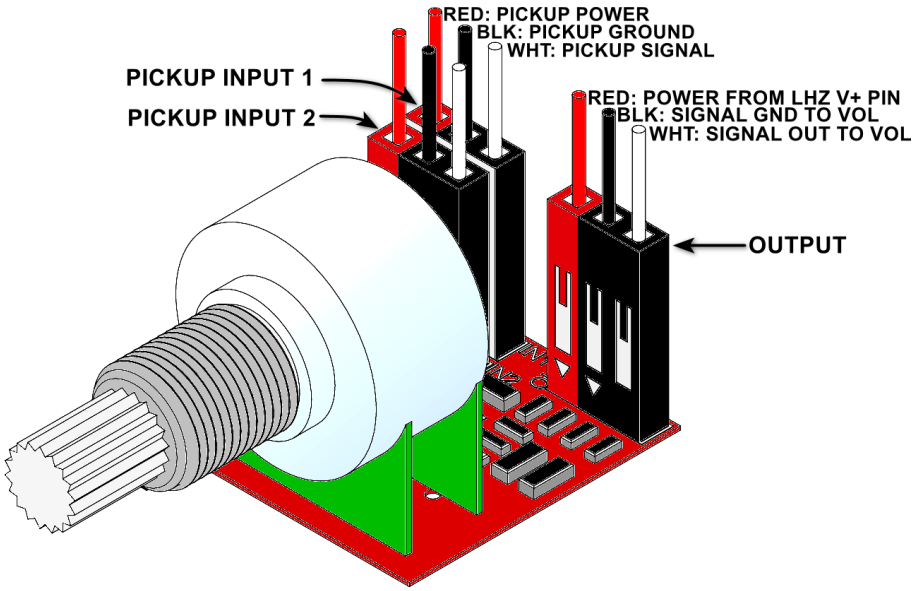

INCLUDED CABLES

A **BLEND TO VOLUME CONTROL (QTY: 1)** 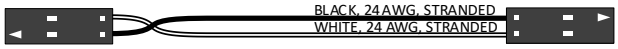	This cable is used to connect the **OUTPUT** of the LBCA to the INPUT of a modular volume pot. Have a soldered pot? Just cut off one end to solder to a traditional volume pot!
B **+9 VOLT POWER JUMPER (QTY: 1)**	Provides positive power (9/18volts) from the LHZ to the LBCA.
C **PICKUP CONNECTOR (QTY: 2)** 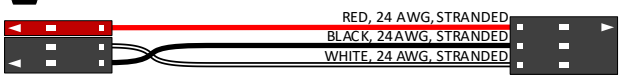	Connects the LBCA to EMG Active pickups. **OPTION**: *Cut off one set of connectors to create a flying-lead connector that can be soldered to existing pickup wires!*

Modular connections

The unit ships with a 2-pin cable to connect the LBCA-02 output to the input of a modular EMG volume potentiometer. Active EMG pickups will directly connect to the IN terminals via user-supplied EMG pickup cables. The following diagram shows a typical modular configuration.

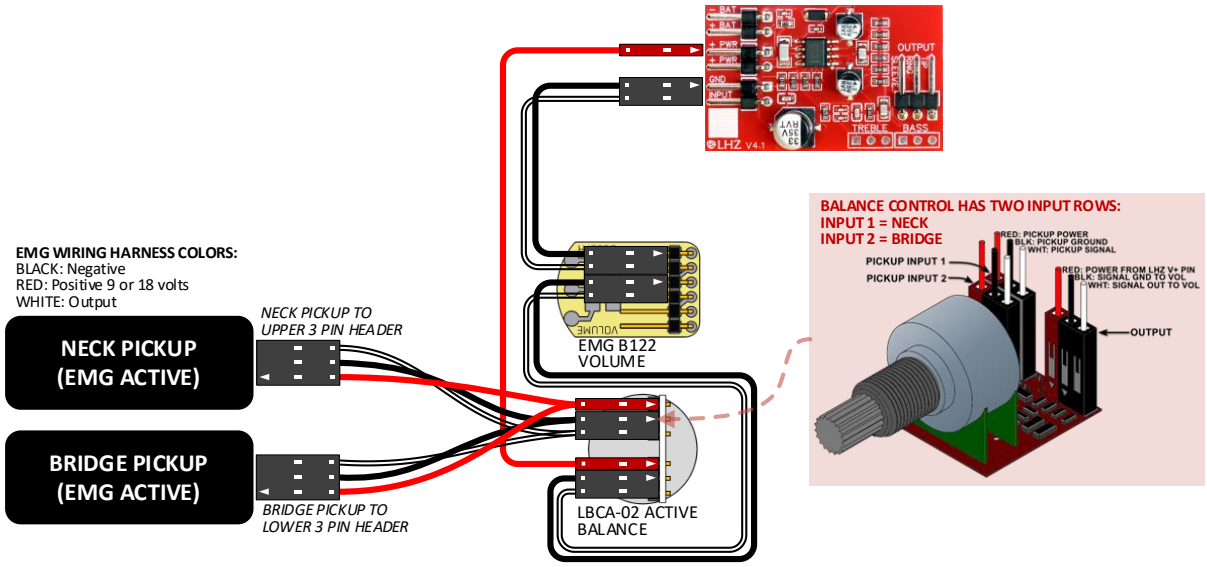

Please refer to the LHZ Installation Manual for more wiring diagrams that cover most control configurations.

Solder connections

The LBCA-02 ships with flying lead connectors that allow traditional soldered pickup wires to be connected. Instead of providing solder pads on the board, simply solder the existing pickup wires to the connectors and plug them into the LBCA-02.

The LBCA-02 can also be connected to a traditional soldered volume pot in the same manner. Just cut one connector off the provided 2-pin cable and solder those wires to the volume pot

NOTE ABOUT FACTORY PICKUP CABLES: EMG pickups almost always have modular cables. If you have EMG pickups but there are soldered connections in the cavity, it is likely the OEM removed the quick-disconnects from the wires! Simply remove a pickup and look underneath it… if it has a connector, you can order replacement modular pickup cables directly from EMG! The modular EMG pickup cables will plug directly into the LBCA-02.